Waterfall Harmony Slider – 2 Panel RH
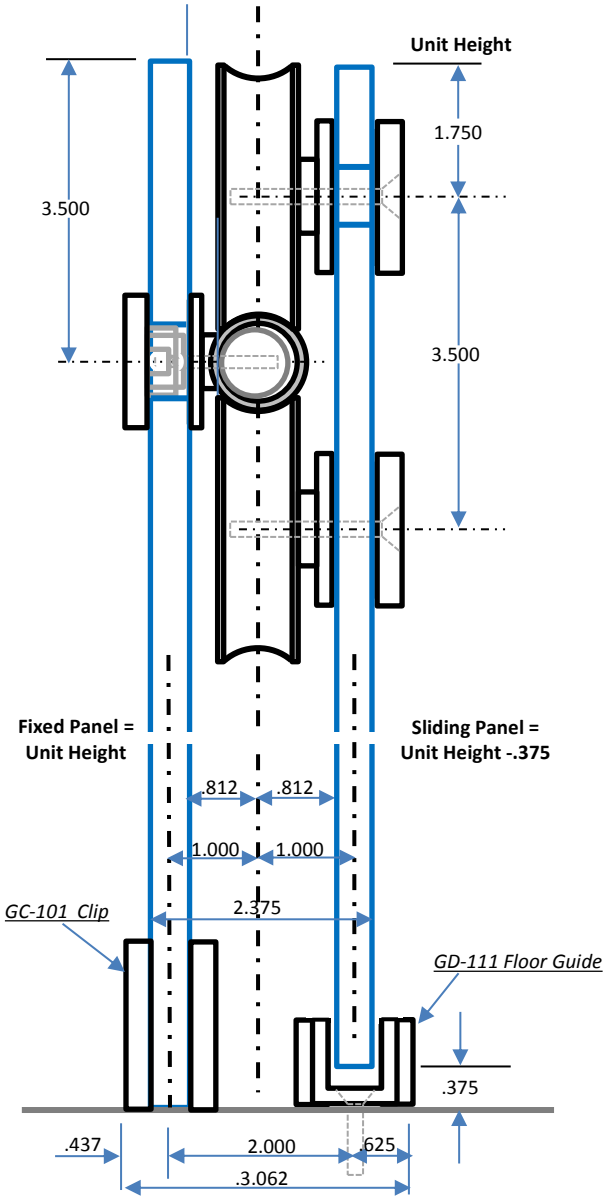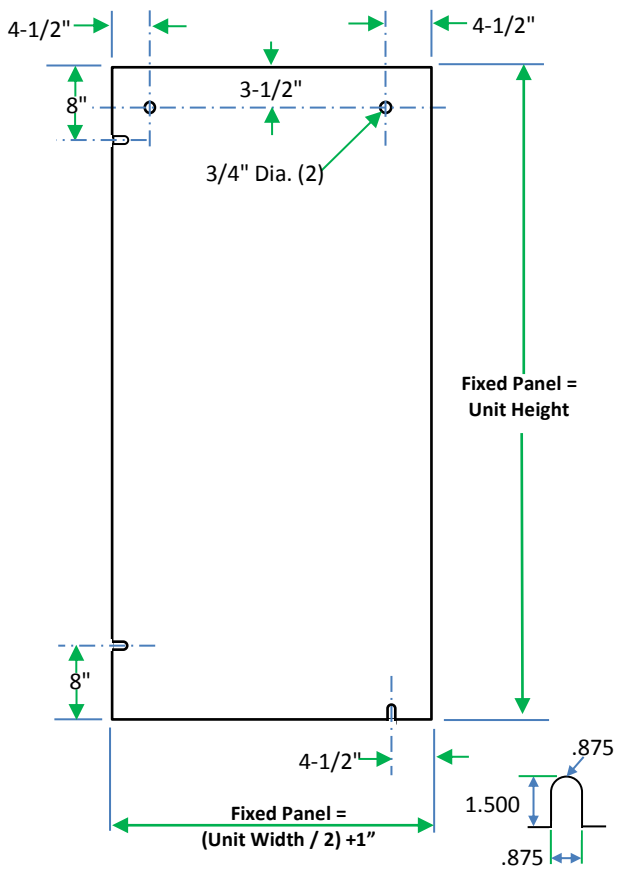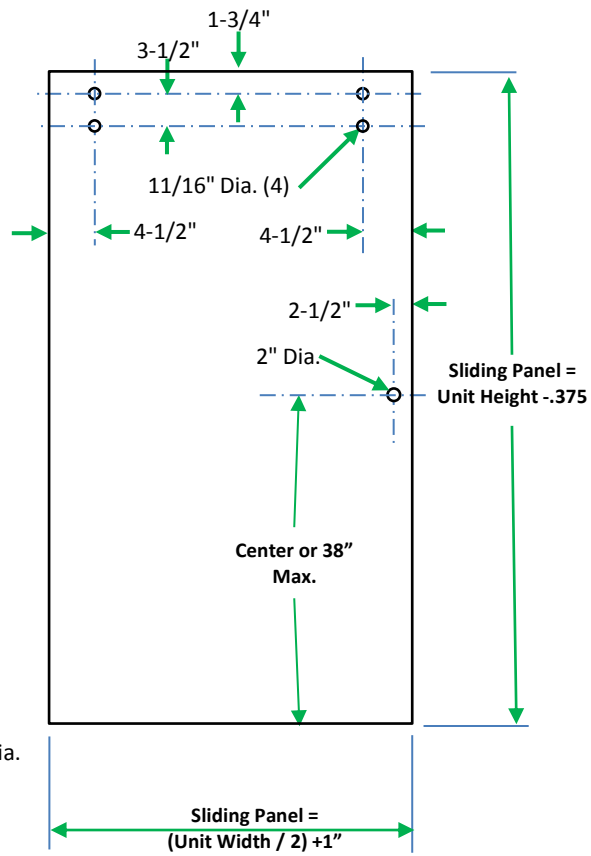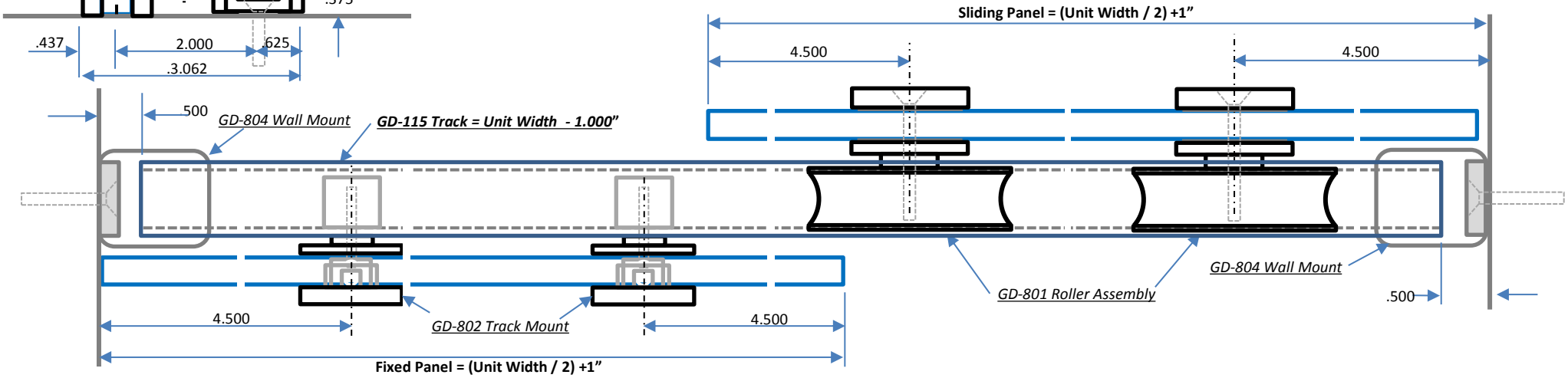
Revised 1-17-18